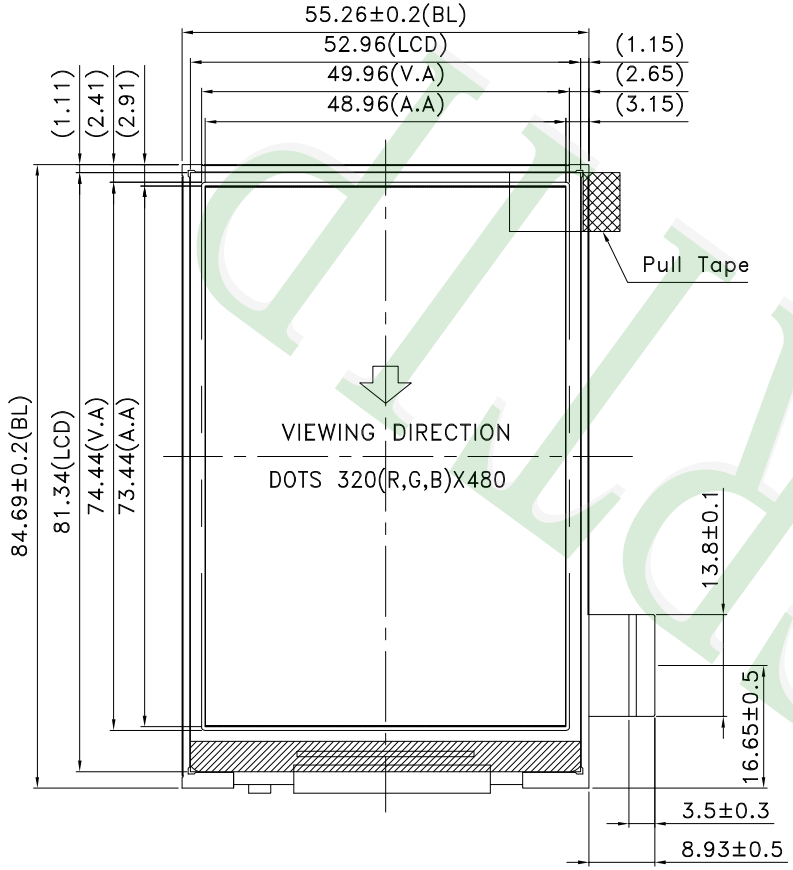

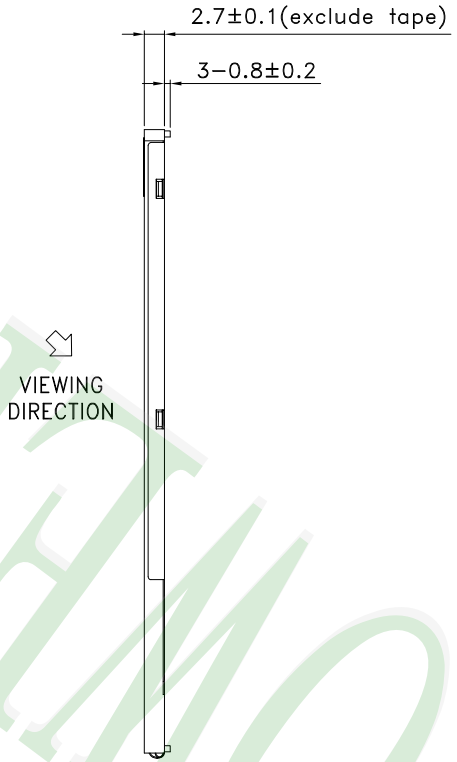

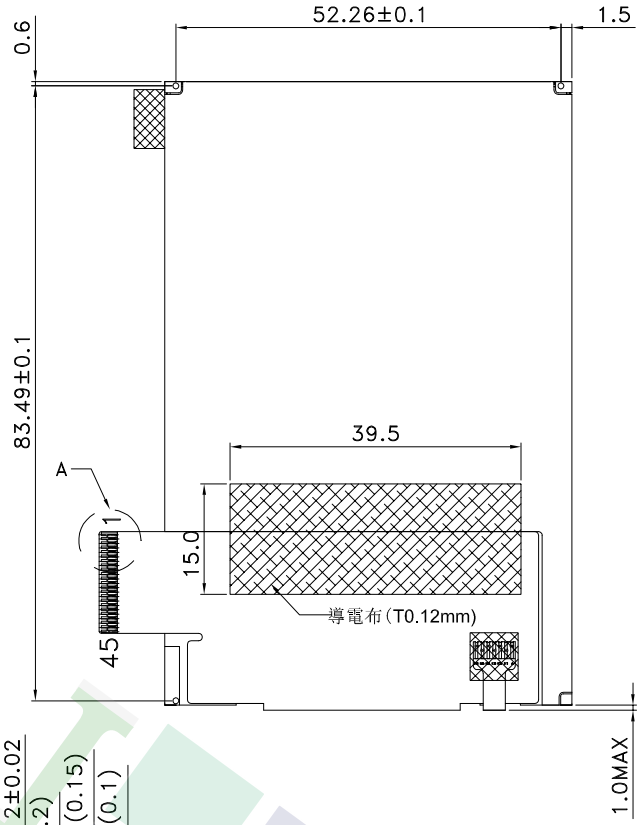

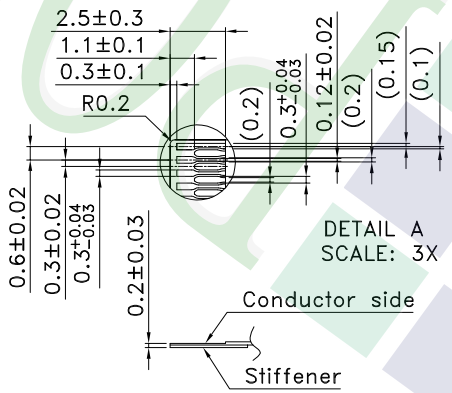

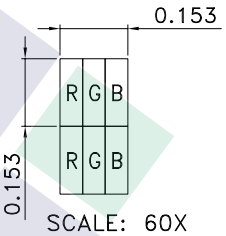

NOTES:

1. LCD TYPE: a-SI TFT
2. LCD DISPLAY: POSITIVE/TRANSMISSIVE
3. VIEW DIRECTION: 12 O'CLOCK
4. The tolerance unless classified ±0.3mm,R for not assigned 0.5mm
5. FPC suggested connector : "Hirose"FH26-45S-0.3SHW or compatible

REV	REV BY	REVISER	DATE
007			
006			
005			
004			
003			
002			
001	NEW DRAWING	Eva	2015/07/08

PART NO: PH320480T009-LAA01

DRAWING NAME : LMD-PH320480T009-LAA01

TITLE: LCD MODULE DRAWING

久正光電股份有限公司
POWERTIP TECHNOLOGY CORPORATION

Design	Eva Liao	(3)	Surface		
Check	Tina Chen	Unit	MM	Material	
Approve	Linda Lee	Scale	FIT	Thickness	
		Page	1/1	Quantity	

Length(Min) (mm) \ Tolerance \ Precision	Precision Level
1 ~ 4	-
4 ~ 16	-
16 ~ 63	-
63 ~ 250	-
250 ~ 1000	-

PT-A-054-01